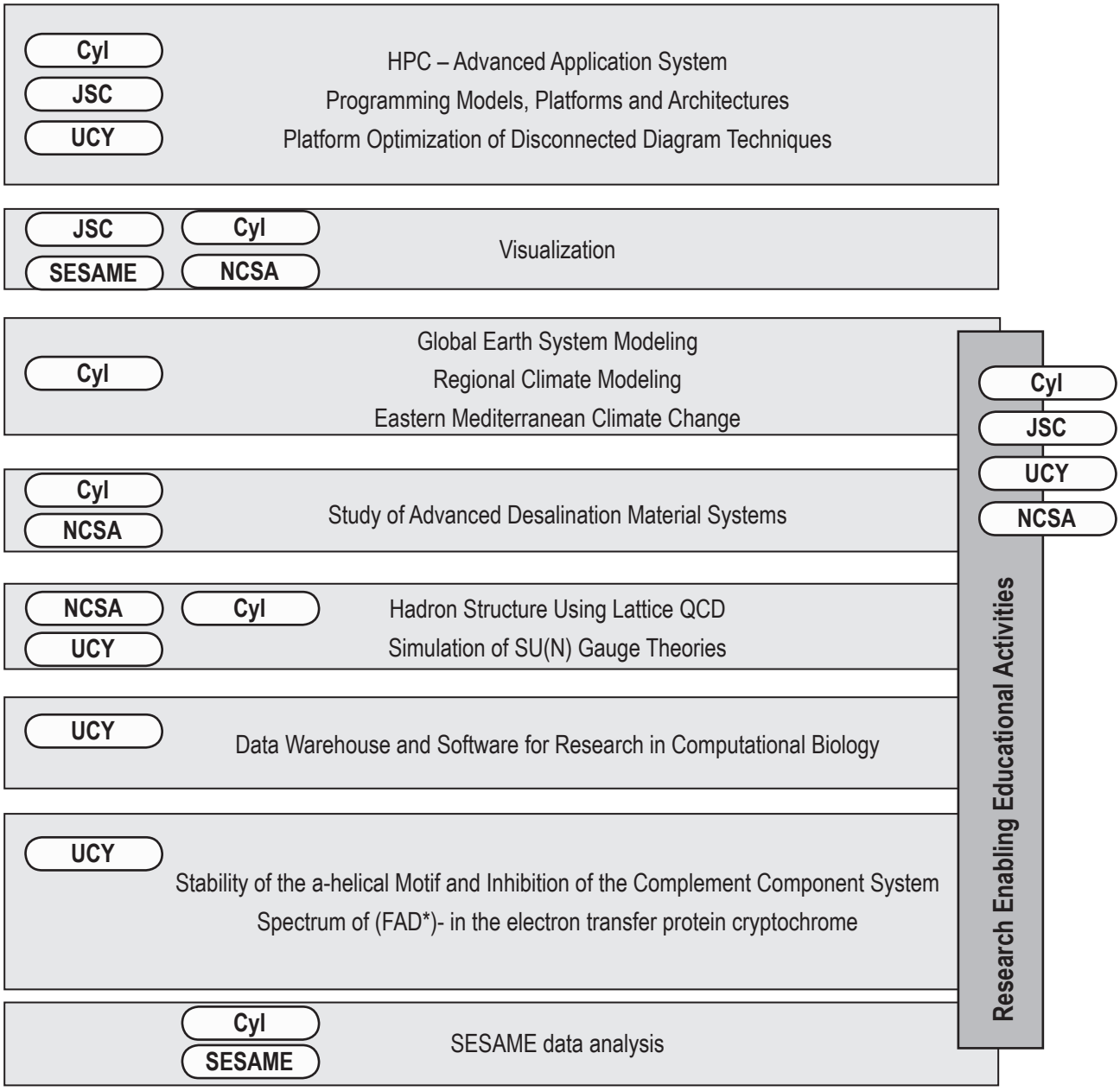
Cyl
JSC
UCY
HPC – Advanced Application System
Programming Models, Platforms and Architectures
Platform Optimization of Disconnected Diagram Techniques
JSC
SESAME
Cyl
NCSA
Visualization
Cyl
Global Earth System Modeling
Regional Climate Modeling
Eastern Mediterranean Climate Change
Cyl
NCSA
Study of Advanced Desalination Material Systems
NCSA
UCY
Cyl
Hadron Structure Using Lattice QCD
Simulation of SU(N) Gauge Theories
UCY
Data Warehouse and Software for Research in Computational Biology
UCY
Stability of the a-helical Motif and Inhibition of the Complement Component System
Spectrum of (FAD*)- in the electron transfer protein cryptochrome
Cyl
SESAME
SESAME data analysis
Research Enabling Educational Activities
Cyl
JSC
UCY
NCSA